SB15m

rigging manual (EN)

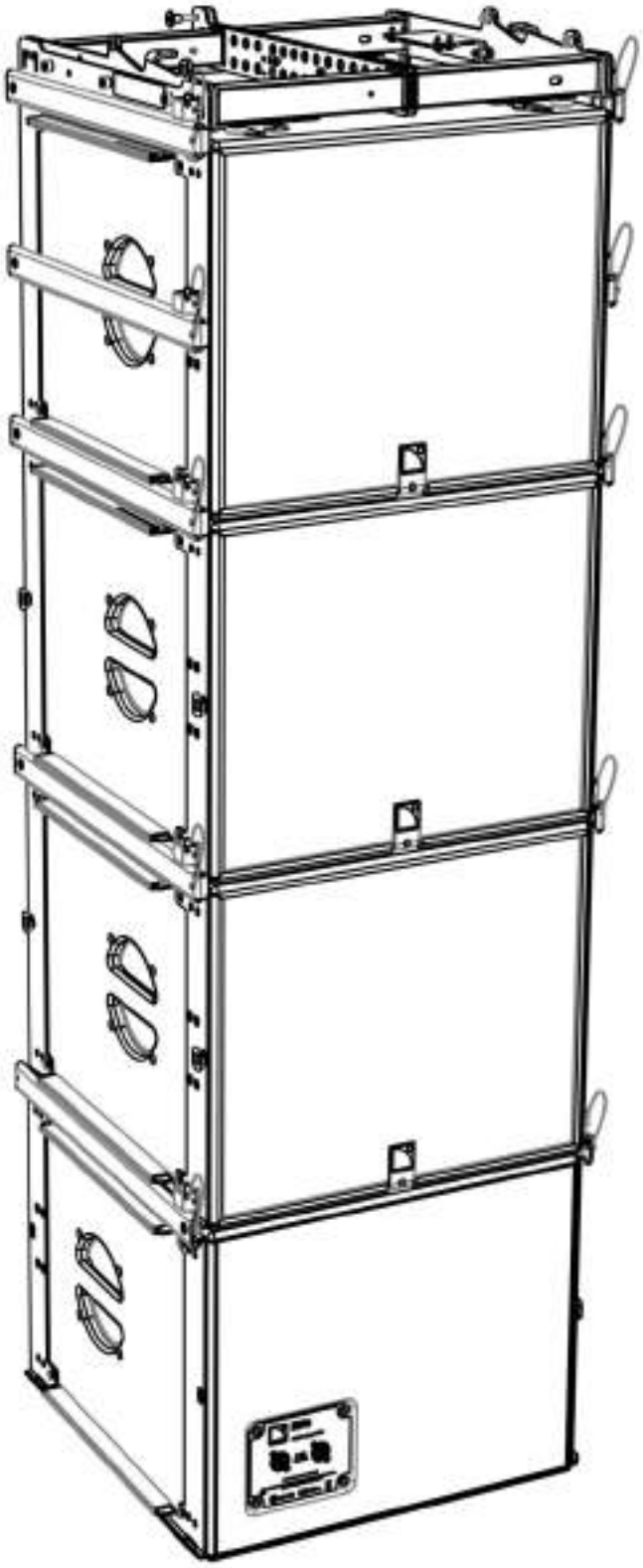

Document reference: SB15m_RM_EN_ 2.0

Distribution date: December 17, 2021

©2021 L-ACOUSTICS®. All rights reserved.

No part of this publication may be reproduced or transmitted in any form or by any means without the express written consent of the publisher.

SAFETY INSTRUCTIONS

1. **Read this manual**
2. **Follow all SAFETY INSTRUCTIONS as well as DANGER and OBLIGATION warnings**
3. **Never incorporate equipment or accessories not approved by L-ACOUSTICS®**
4. **Inspect the system before any deployment**
   Perform safety related checks and inspections before any deployment.
   Perform preventive maintenance at least once a year.
   Insufficient upkeep of the product can void the warranty.
   If any safety issue is detected during inspection, do not use the product before performing corrective maintenance.
   Check for issues. A rigging system part or fastener is missing or loose. A rigging system part exhibits: bends, breaks, broken parts, corrosion, cracks, cracks in welded joints, deformation, denting, wear, holes. A safety cue or label is missing.
5. **Read all the related PRODUCT INFORMATION documents before exploiting the system**
   The product information document is included in the shipping carton of the related system component.
6. **Work with qualified personnel for rigging the system**
   Installation should only be carried out by qualified personnel that are familiar with the rigging techniques and safety recommendations outlined in this manual.
7. **Ensure personnel health and safety**
   During installation and set-up personnel must wear protective headgear and footwear at all times. Under no circumstances personnel is allowed to climb on a loudspeaker assembly.
8. **Respect the Working Load Limit (WLL) of third party equipment**
   L-ACOUSTICS® is not responsible for any rigging equipment and accessories provided by third party manufacturers. Verify that the Working Load Limit (WLL) of the suspension points, chain hoists and all additional hardware rigging accessories is respected.
9. **Respect the maximum configurations and the recommended safety level**
   For safety issue, respect the maximum configurations outlined in this manual. To check the conformity of any configuration in regards with the safety level recommended by L-ACOUSTICS®, model the system in SOUNDVISION and refer to the warnings in **Mechanical Data** section.
10. **Be cautious when flying a loudspeaker array**
    Always verify that no one is standing underneath the loudspeaker array when it is being raised. As the array is being raised, check each individual element to make sure that it is securely fastened to the adjacent element. Never leave the array unattended during the installation process. As a general rule, L-ACOUSTICS® recommends the use of safety slings at all times.
11. **Be cautious when ground-stacking a loudspeaker array**
    Do not stack the loudspeaker array on unstable ground or surface. If the array is stacked on a structure, platform, or stage, always check that the latter can support the total weight of the array. As a general rule, L-ACOUSTICS® recommends the use of safety straps at all times.
12. **Take into account the wind effects on dynamic load**
    When a loudspeaker assembly is deployed in an open air environment, wind can produce dynamic stress to the rigging components and suspension points. If the wind force exceeds 6 bft (Beaufort scale), lower down and/or secure the loudspeaker array.

SYMBOLS

The following symbols are used in this document:

DANGER
This symbol indicates a potential risk of harm to an individual or damage to the product.

It can also notify the user about instructions that must be strictly followed to ensure safe installation or operation of the product.

OBLIGATION
This symbol notifies the user about instructions that must be strictly followed to ensure proper installation or operation of the product.

EQUIPMENT
This symbol indicates the equipment, tools, and spare parts required to perform a procedure.

INFORMATION
This symbol notifies the user about complementary information or optional instructions.

WELCOME TO L-ACOUSTICS®

Thank you for choosing the L-ACOUSTICS® **SB15m** subwoofer enclosure.

This document contains essential information on rigging the system properly and safely. Carefully read this document in order to become familiar with these procedures.

As part of a continuous evolution of techniques and standards, L-ACOUSTICS® reserves the right to change the specifications of its products and the content of its documents without prior notice.

Please check the L-ACOUSTICS® web site on a regular basis to download the latest document and software updates: www.l-acoustics.com.

CONTENTS

1 RIGGING SYSTEM 5
1.1 Loudspeaker enclosure 5
1.2 Rigging elements 5
1.3 Software application 5
2 MECHANICAL SAFETY 7
2.1 Maximum configurations 7
2.2 Assessing mechanical safety 7
3 SYSTEM SET-UP 8
3.1 Flying 8
3.2 Pole-mounting 8
3.3 Ground-stacking 9
4 SUBSET PROCEDURES 10
PROCEDURE A **Attaching the SB15m to a second element** 10
PROCEDURE B **Installing a shackle or CLAMP250** 11

1 RIGGING SYSTEM

The system approach developed by L-ACOUSTICS® consists in providing packaged solutions for loudspeaker systems in order to guarantee the highest and most predictable level of performance at any step: modeling, installation, and operation. An L-ACOUSTICS® loudspeaker system is the set of components available to form any loudspeaker system based on one of the full-range loudspeaker enclosures afforded by L-ACOUSTICS®. It includes enclosures, rigging accessories, loudspeaker cables, amplified controllers and software applications.

The **SB15m** is the recommended subwoofer for the XT range and KIVA enclosures from L-ACOUSTICS®. It extends the low frequency response of a loudspeaker system down to 40 Hz.

The main components involved in the **SB15m** rigging process are the following:

1.1 Loudspeaker enclosure

SB15m Subwoofer enclosure.

Loudspeaker system design
Sound design aspects are beyond the scope of this document. However, the various applications of the system will be based on the loudspeaker configuration presented in this document.

1.2 Rigging elements

SB15MRIG Coupling bars dedicated to the SB15m.
Equipped with the LOCKTAB locking tab.
Delivered with the SB15m.

KIBU-SB Frame for flying KIVA and SB15m enclosures as line elements or independent/mixed arrays.
Provided with two bow shackles WLL 1 t.

CLAMP250 Truss clamp

1.3 Software application

SOUNDVISION Proprietary 3D acoustical and mechanical modeling software.

Other SB15m SYSTEM components
All the other components of the system are presented in the SB15m **user manual**, document intended to describe the enclosures configuration and connection.

SB15m

SB15MRIG equipped with LOCKTAB
(Delivered with the SB15m)

KIBU-SB

SOUNDVISION

Main components involved in the SB15m rigging process

2 MECHANICAL SAFETY

2.1 Maximum configurations

The SB15m rigging system complies with BGV-C1 (2012), DIN 18800 and EN ISO 12100-1 (2004) when the following vertical arrays are deployed.

Ground-stacking	Flying	
On the floor 8 SB15m	With KIBU-SB and shackle WLL 1 t 8 SB15m	With KIBU-SB and CLAMP250 6 SB15m

Mechanical safety of the rigging system
Before any installation, always model the system in SOUNDVISION and check the **Mechanical Data** section for any *stress warning* or *stability warning*.

2.2 Assessing mechanical safety

In order to assess the actual safety of any array configuration before implementation, refer to the following warnings:

Rated working load limit (WLL) is not enough
The rated WLL is an indication of the element resistance to tensile stress. For complex mechanical systems such as loudspeaker arrays, WLLs cannot be used per se to determine the maximum number of enclosures within an array or to assess the safety of a specific array configuration.

Mechanical modeling with SOUNDVISION
The working load applied to each linking point, along with the corresponding safety factor, will depend on numerous variables linked to the composition of the array (type and number of enclosures, splay angles) and the implementation of the flying or stacking structure (number and location of flying points, site angle). This cannot be determined without the complex mechanical modeling and calculation offered by SOUNDVISION

Assessing the safety with SOUNDVISION
The overall safety factor of a specific mechanical configuration always corresponds to the lowest safety factor among all the linking points. Always model the system configuration with the SOUNDVISION software and check the Mechanical Data section to identify the weakest link and its corresponding working load. By default, a *stress warning* will appear when the mechanical safety goes beyond the recommended safety level.

Safety of ground-stacked arrays in SOUNDVISION
For ground-stacked arrays, a distinct *stability warning* is implemented in SOUNDVISION. It indicates a tipping hazard when the array is not secured to the ground, stage or platform. It is user responsibility to secure the array and to ignore this warning.

Consideration must be given to unusual conditions
SOUNDVISION calculations are based on usual environmental conditions. A higher safety factor is recommended with factors such as extreme high or low temperatures, strong wind, prolonged exposition to salt water, etc. Always consult a rigging specialist to adopt safety practices adapted to such a situation.

3 SYSTEM SET-UP

Independent or mixed
This document only deals with the independent rigging of the SB15m subwoofer enclosure.
When the SB15m enclosure is used with a main system, some configurations can imply the set-up of mixed arrays, such as KIVA/SB15m arrays.
Always refer to the rigging manual of the main system or enclosure to get acquainted with the rigging procedures specific to the mixed main/sub arrays.

Truss clamping
By installing a CLAMP250 instead of a shackle, an array can be attached to a truss. Refer to **PROCEDURE B**.

Final check before flying the system
Coupling bars: All lugs of locking tabs must be secured, verify the locking tabs yellow labels are fully covered as indicated in **PROCEDURE A**.
Shackles: All safety pins must be secured as indicated in **PROCEDURE B**.

Cardioid configuration
A cardioid configuration is an array of four subwoofers with one reversed element.
Refer to the subwoofer user manual for details about the use of this configuration.
Any of the following arrays can be set in cardioid configuration.

3.1 Flying

Vertical

- ▶ Place one enclosure (logo down) on the ground.
- ▶ Remove the rigging bars from the KIBU-SB.
- ▶ Place the KIBU-SB on the enclosure and align their rails.
- ▶ Attach the KIBU-SB and the top enclosure.
- ❶ Refer to **PROCEDURE A**.
- ▶ Attach a bow shackle WLL 1 t or a CLAMP250 on the KIBU-SB.
- ❶ Refer to **PROCEDURE B**.
- ▶ Raise the array so you can position another enclosure under it.
- ▶ Lower the array so it rests on the enclosure.
- ▶ Attach the enclosure to the bottom enclosure of the array.
- ❶ Refer to **PROCEDURE A**.
- ▶ Repeat the three previous steps until the array is completed.

3.2 Pole-mounting

Pole-mounted enclosure on SB15m

- ▶ Insert and secure the pole in the SB15m socket.
- ▶ Secure the pole.
- ▶ Insert and secure the enclosure on the pole.

Refer to the main enclosure system rigging manual for a detailed rigging procedure

3.3 Ground-stacking

Vertical

▶ Stack the enclosures (logo down) on top of each other.
▶ Attach the adjacent enclosures.
❶ Refer to **PROCEDURE A**.

Block

▶ Assemble vertical stacks side by side.
Stack and attach the enclosures (logo down) on top of each other.
❶ Refer to **PROCEDURE A**.

Horizontal & On-end

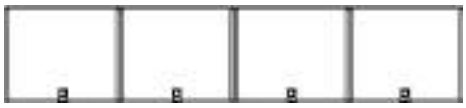

▶ Place the SB15m enclosures side by side as indicated in the figure.

Dismantling an array
Apply the associated set-up procedure in reversed order.

4 SUBSET PROCEDURES

PROCEDURE A Attaching the SB15m to a second element

1. Remove the bar from its storage location.
2. Slide the bar into adjacent rigging rails from the front of the array.
3. Secure the bar with the locking tab.
   a. Accurately position the bar by pushing it into place.
   b. Pinch the spring tongue and slide the locking tab until it snaps into place.
   When encountering difficulty, try to slide the tab from the other side.
   c. Check that the yellow label is fully covered to know if the locking tab is fully engaged.

▶ PROCEDURE A

Sliding the coupling bar between two SB15m.

2. Sliding the coupling bar between SB15m and KIBU-SB.

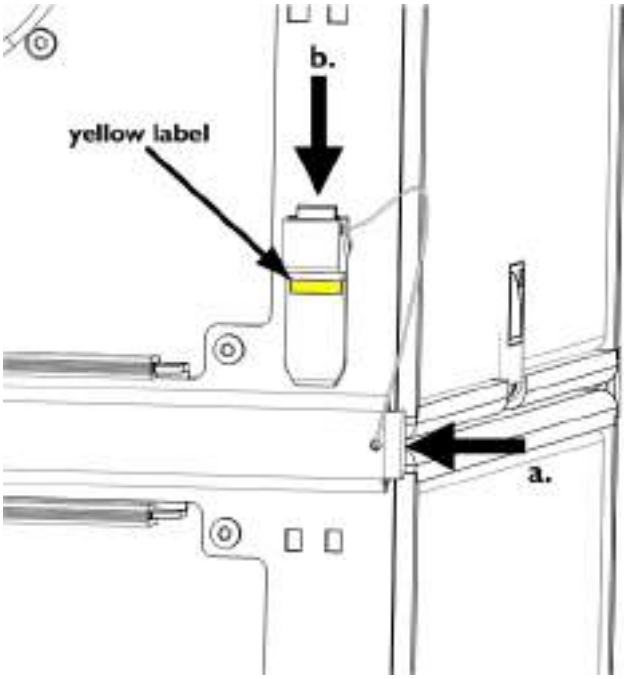

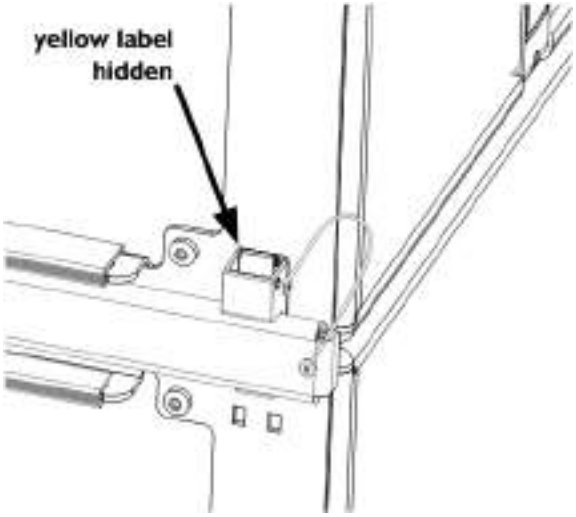

Always check that the yellow label is fully covered to ensure the locking tabs are fully engaged.

3. Securing the bar with the locking tab.

The KIBU-SB is compatible with SB15m and KIVA. One side dedicated to KIVA and the other to SB15m. Refer to the **KIVA-SB15m system rigging manual** for more information about the use of the KIBU-SB with KIVA alone or KIVA and SB15m in mixed arrays.

1. Refer to **SOUNDVISION** modeling to identify the hole number that corresponds to the desired tilt angle.

KIBU-SB hole numbering on the side of the SB15m

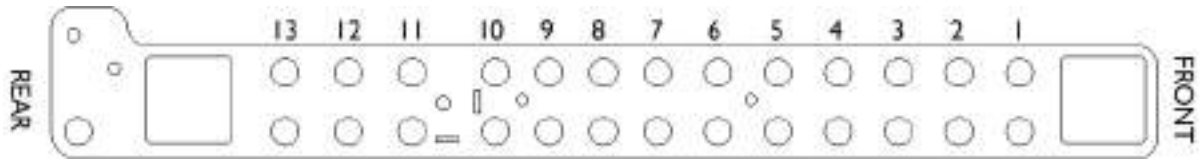

To achieve a 0° site angle with SB15m use hole number 6.

2. Secure a shackle or CLAMP250 to the identified hole.
   a. Attach the shackle or the CLAMP250 bar to the identified hole, by driving the pierced bolt and securing the nut.
   b. Lock the pierced bolt with the safety pin.
   c. With CLAMP250, install safety slings between the KIBU-SB and the truss.

▶ PROCEDURE B

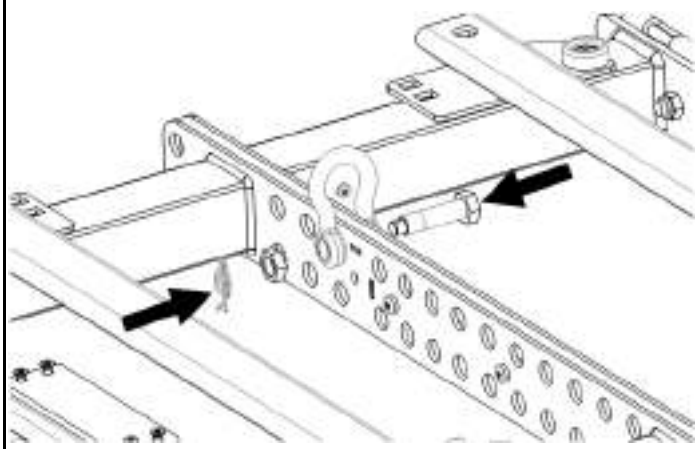

A shackle being installed on the KIBU-SB.

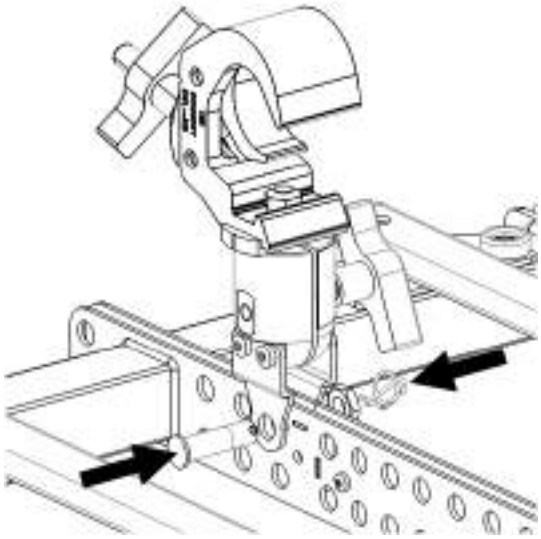

2.a. A CLAMP250 being installed on the KIBU-SB.

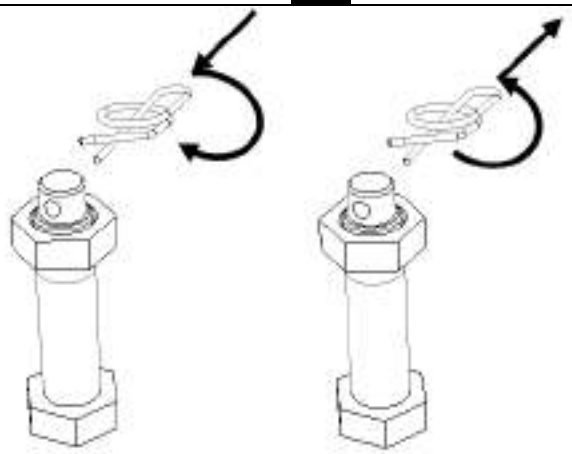

2.b. Safety pin mechanism on shackles.

L-Acoustics
13 rue Levacher Cintrat - 91460 Marcoussis - France
+33 1 69 63 69 63 - info@l-acoustics.com
www.l-acoustics.com

L-ACOUSTICS
GROUP